SALES DRAWING SALES DRAWING

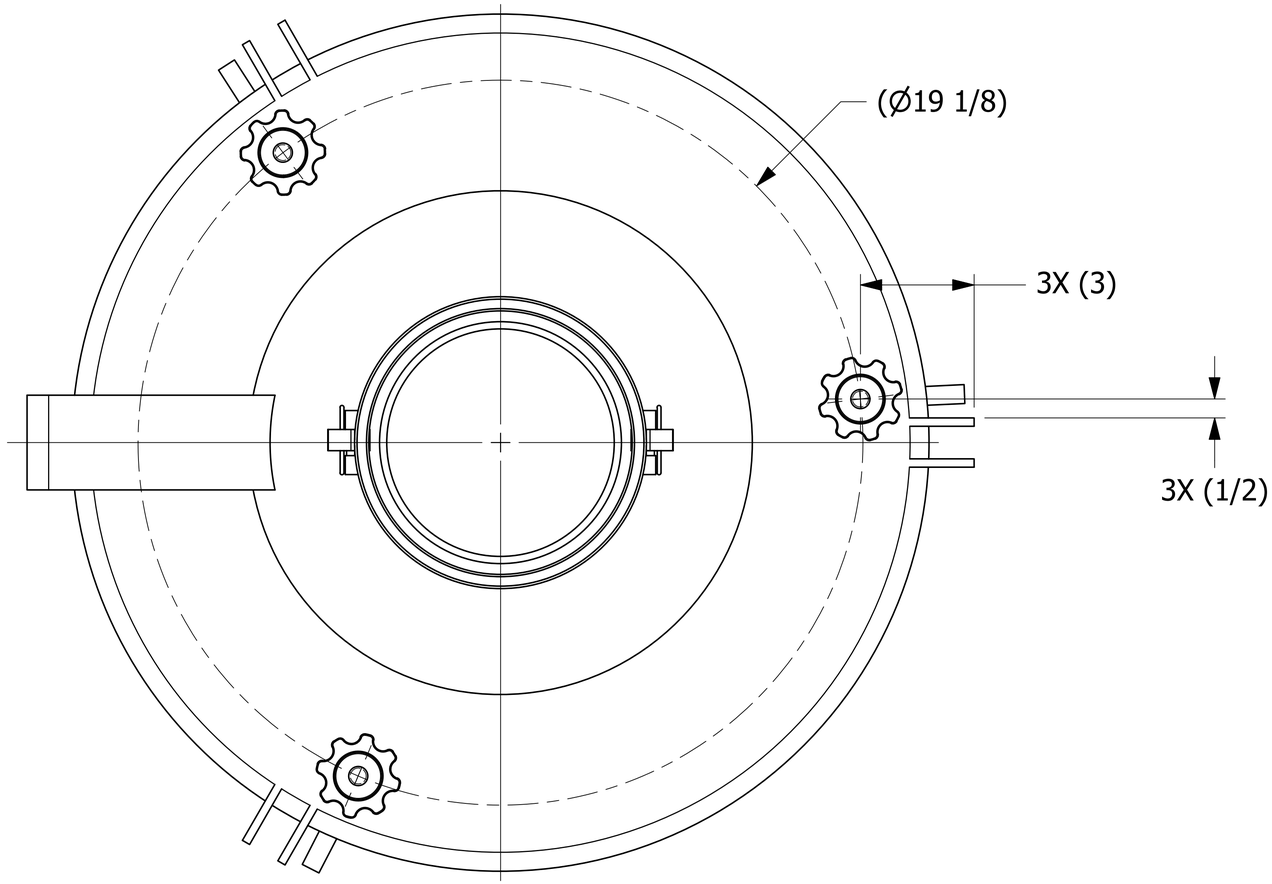

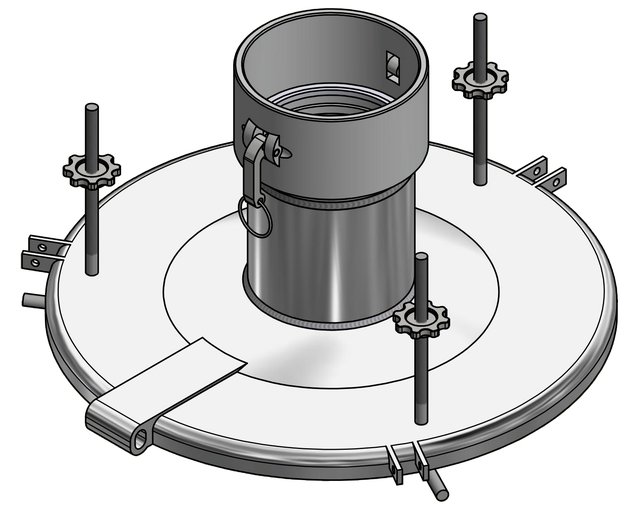

ISOMETRIC VIEW

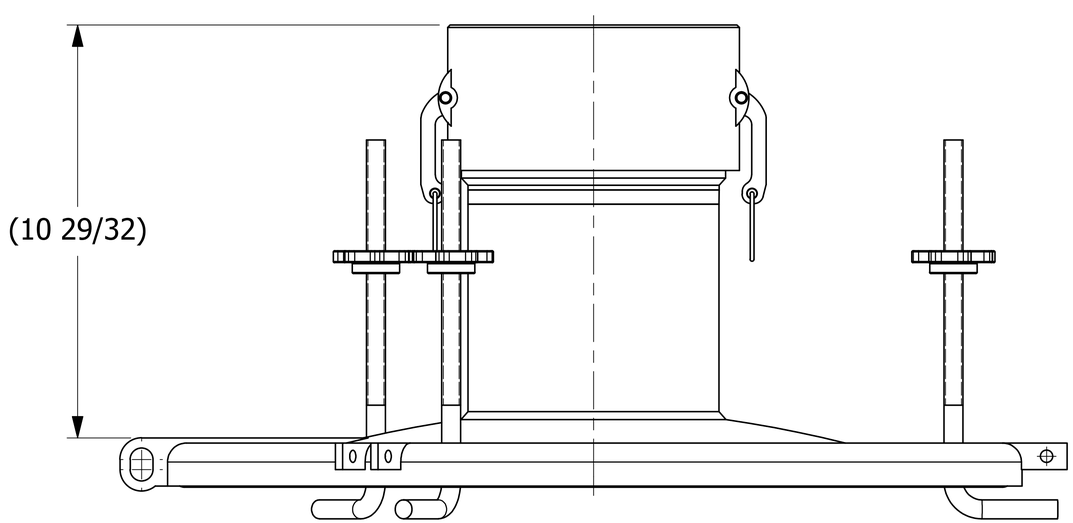

NOTE:
GASKET IS FDA WHITE NITRILE.

REV	BY	DATE	REF #	
C	CHL	11/5/19	201911051147	CHL
				PUB

UNLESS OTHERWISE SPECIFIED DIMENSIONAL TOLERANCES

FRACTIONAL:	±1/16
X.XX:	±.03
X.XXX:	±.015
ANGULAR:	±1°

DEBURR ALL SHARP EDGES. ALL MACHINED SURFACES TO HAVE A 125 RMS FINISH UNLESS NOTED OTHERWISE.

THIRD ANGLE PROJECTION

DRAWN BY:	WEB
CHECKED BY:	CHL
PROTOTYPE DATE:	1/8/2014
APPROVED FOR PRODUCTION BY:	WEB
PRODUCTION DATE:	1/13/2014
SIZE:	D
DRAWING #:	38042

SALCO PRODUCTS, INC.

PART NAME: LOADING COVER 20"

MATERIAL: ALUMINUM

PROJECT #: 140108FR

SHEET #: 1 OF 1

SCALE: 1:2

PART #: LC20A3A

THIS PRINT, PROPERTY OF SALCO PRODUCTS INC, CONTAINS PROPRIETARY INFORMATION AND MUST NOT BE COPIED, REPRODUCED, OR USED DETRIMENTALLY TO OUR INTEREST.

SALES DRAWING SALES DRAWING